Segment Gating for Static Energy Reduction in Networks-on-Chip

Kyle C. Hale
Boris Grot
Stephen W. Keckler

December 12, 2009

Department of Computer Science
The University of Texas at Austin

Motivation

- Static Energy consumption due to leakage threatening to become dominant
- Network constitutes a substantial (up to 36%) portion of total chip energy
  [Kim et al., ISLPED '03]
- Abundant on-chip bandwidth often underutilized due to low injection rates

Department of Computer Science
The University of Texas at Austin

Outline

- Background
- Segment Gating
- Methodology
- Evaluation
  - Optimal Gating Scheme
  - Static Scheme with Random Segment Selection
  - Static Scheme with Intelligent Segment Selection
  - Dynamic Gating Scheme
- Future Work

Department of Computer Science
The University of Texas at Austin

Reducing Leakage in the Network

- Gated-V_{DD} (power gating) at various granularities
- Power-aware buffer designs [Chen & Peh, ISLPED '03]
- Slow-Silent VCs (DVFS applied to links, power gate the buffers) [Matsutani et al., NOCS '08]

Department of Computer Science
The University of Texas at Austin

Additional Gating Targets

- Aggressive gating of idle resources
- Link
  - Driver, repeaters
- Router
  - All VC buffers and management logic
  - Xbar ports
    - line drivers & switching elements
  - Allocators
    - 2-level stateful allocators

Department of Computer Science
The University of Texas at Austin

Segment Gating

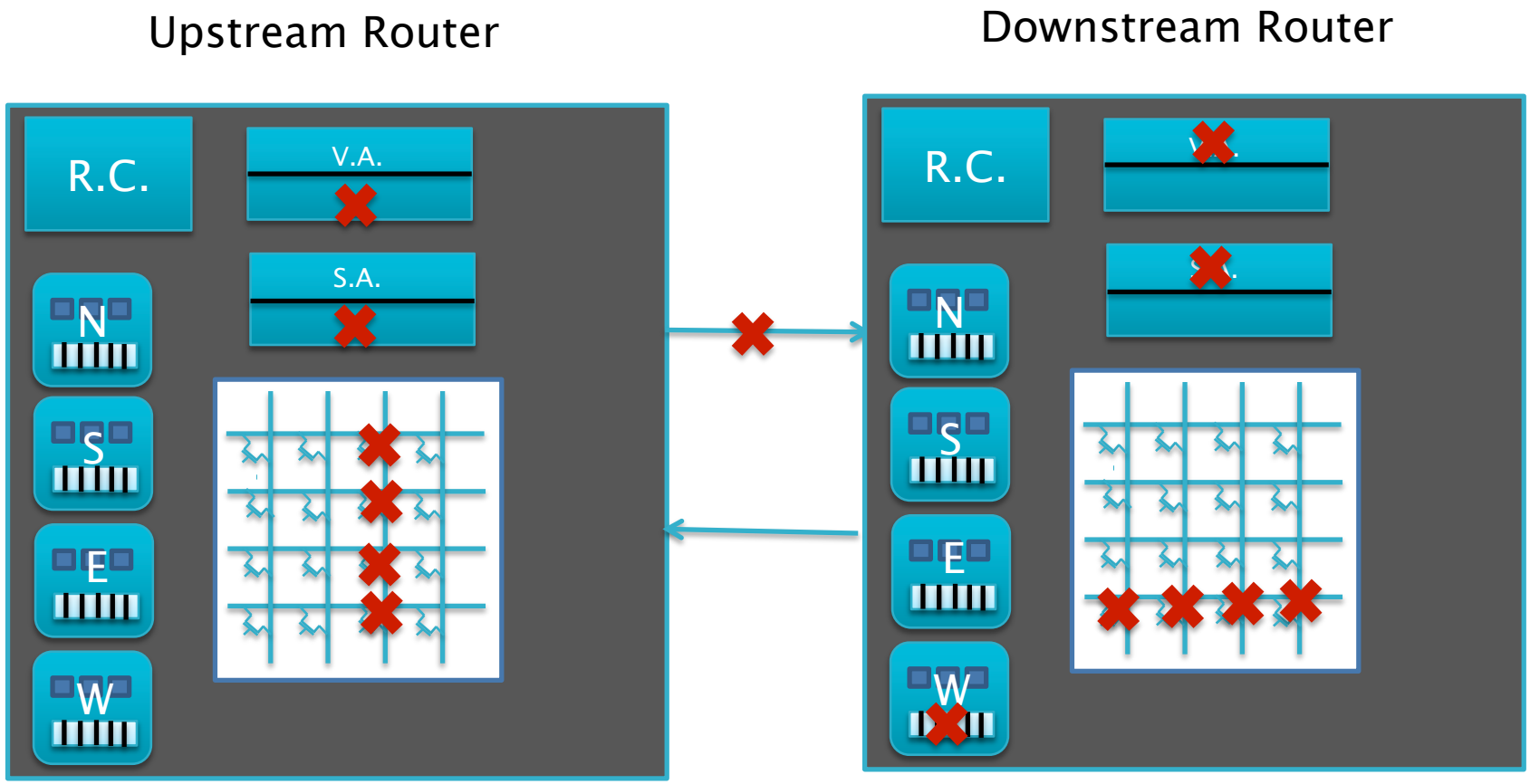

Department of Computer Science
The University of Texas at Austin

Outline

- Background
- Segment Gating
- Methodology
- Evaluation
  - Optimal Gating Scheme
  - Static Scheme with Random Segment Selection
  - Static Scheme with Intelligent Segment Selection
  - Dynamic Gating Scheme
- Future Work

Department of Computer Science
The University of Texas at Austin

Methodology

- Three types of Gating Schemes
  - Optimal Gating (oracle, no cost)
    - Upper bound on energy savings
  - Static Segment Gating
    - Off-line decision on which segments to gate
  - Dynamic Segment Gating
    - "On-line" decisions based on dynamic workload
- Evaluated via analytical approaches
  - Not simulation based (for now)
  - Effects of contention ignored

Department of Computer Science
The University of Texas at Austin

Optimal Gating Scheme

- No power-down/wake-up overheads (latency, energy)
- Segment shuts down during any period of inactivity and instantly wakes up *on-demand*
- Used as a baseline measurement for static schemes

Department of Computer Science
The University of Texas at Austin

Static Segment Gating

- Objective: Turn off a certain number of segments before the run of the workload
- Measure impact of gating through effect on hop counts
- Static analysis tool:
  - Represents mesh as directed graph
  - Hop counts derived from shortest path lengths between communicating nodes
  - Shortest paths may be longer than min manhattan routes
- Segments turned off via stochastic process
  - Invariant: full connectivity maintained
  - Take multiple samples to generate a distribution

Department of Computer Science
The University of Texas at Austin

Static Gating Scheme with Random Segment Selection

- Select segments at random to power down
- Limits of static segment gating:
  - 161 segments (links) out of 224 gated in a 64-node mesh
  - A gated segment remains in that state for rest of workload
- For certain traffic patterns, a random decision could lead to a bad choice

Department of Computer Science
The University of Texas at Austin

Static Gating Scheme with Intelligent Segment Selection

- Random selection ignores characteristics of traffic patterns
- Instead, pick segments based on link utilization
  - For applications with communication regularity
  - Requires us to know communication pattern *a priori*
- Two-stage approach
  - Stage 1: Pick segments (links) with utilization zero
    - 92 for *bit-complement*
    - 100 for *transpose*
  - Stage 2 (iterative):
    - Turn off least-utilized segment
    - Recompute utilization based on new traffic flow

Department of Computer Science
The University of Texas at Austin

Dynamic Segment Gating

- Objective: Dynamically gate segments to accommodate a changing workload
- PARSEC traces run through cycle-accurate network simulator
  - Log each link's idle/active periods
- Off-line analysis of activity logs
  - Combine with power model
  - Gate idle links
  - Wake up links on demand
  - Ignore contention and wake-up delays
  - Segments must be gated long enough to amortize energy cost of wake-up & power-down

Department of Computer Science
The University of Texas at Austin

Power Model

per-component energy values

Component	Static (nJ/cycle)	Dynamic (nJ/flit)
Flit buffers	1.5	7.23
Crossbar	0.491	10.3
Allocators	0.215	0.7
Link	0.556	8.1

- Derived using ORION 2.0
- Allocator energy: energy from 1st & 2nd level switch and VC allocators combined
- Note: Buffers only account for 55% of leakage energy!

Department of Computer Science
The University of Texas at Austin

Network Configuration

Topology	64-node mesh
Channels	128 bits wide, 1 cycle/link
Synthetic Workloads	Uniform random, transpose, bit-complement. Each workload comprises 1,000 packets injected by each node
PARSEC traces	Blackscholes, bodytrack, fluidanimate, vips, x264. Sim-medium datasets
Router details	2-stage speculative pipeline, 5 ports, 4 VCs/port, 5 flits/VC

Department of Computer Science
The University of Texas at Austin

Outline

- Background
- Segment Gating
- Methodology
- Evaluation
  - Optimal Gating Scheme
  - Static Scheme with Random Segment Selection
  - Static Scheme with Intelligent Segment Selection
  - Dynamic Gating Scheme
- Future Work

Department of Computer Science
The University of Texas at Austin

Optimal Energy Consumption

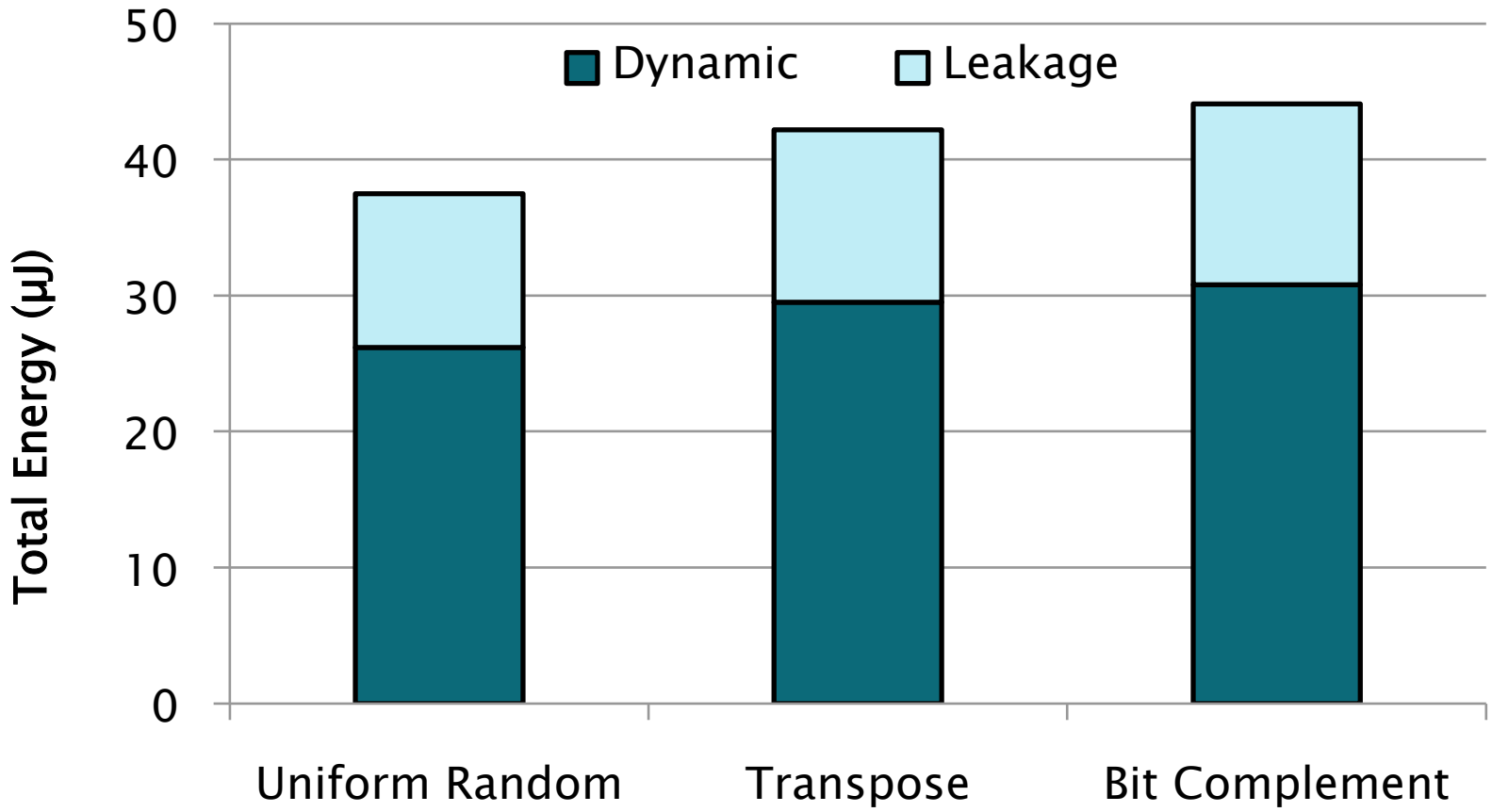

Department of Computer Science
The University of Texas at Austin

Hop Counts After Disabling Segments

Transpose Traffic

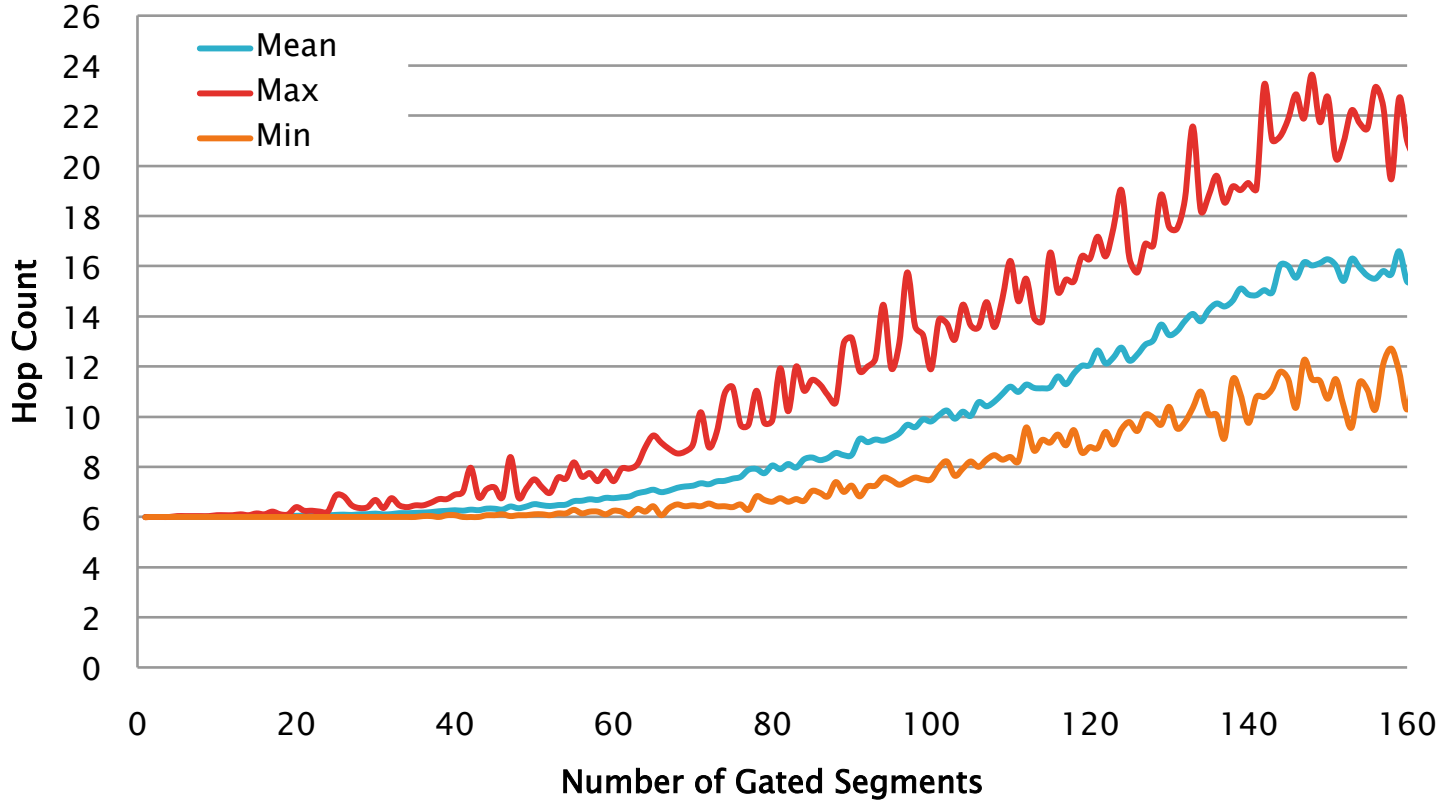

- ~20 edges can be removed with a negligible hop count increase
- 2-4x increase in hop count with max # of segments gated

Department of Computer Science
The University of Texas at Austin

Total Energy With Static Segment Gating (Random Selection)

Transpose Traffic

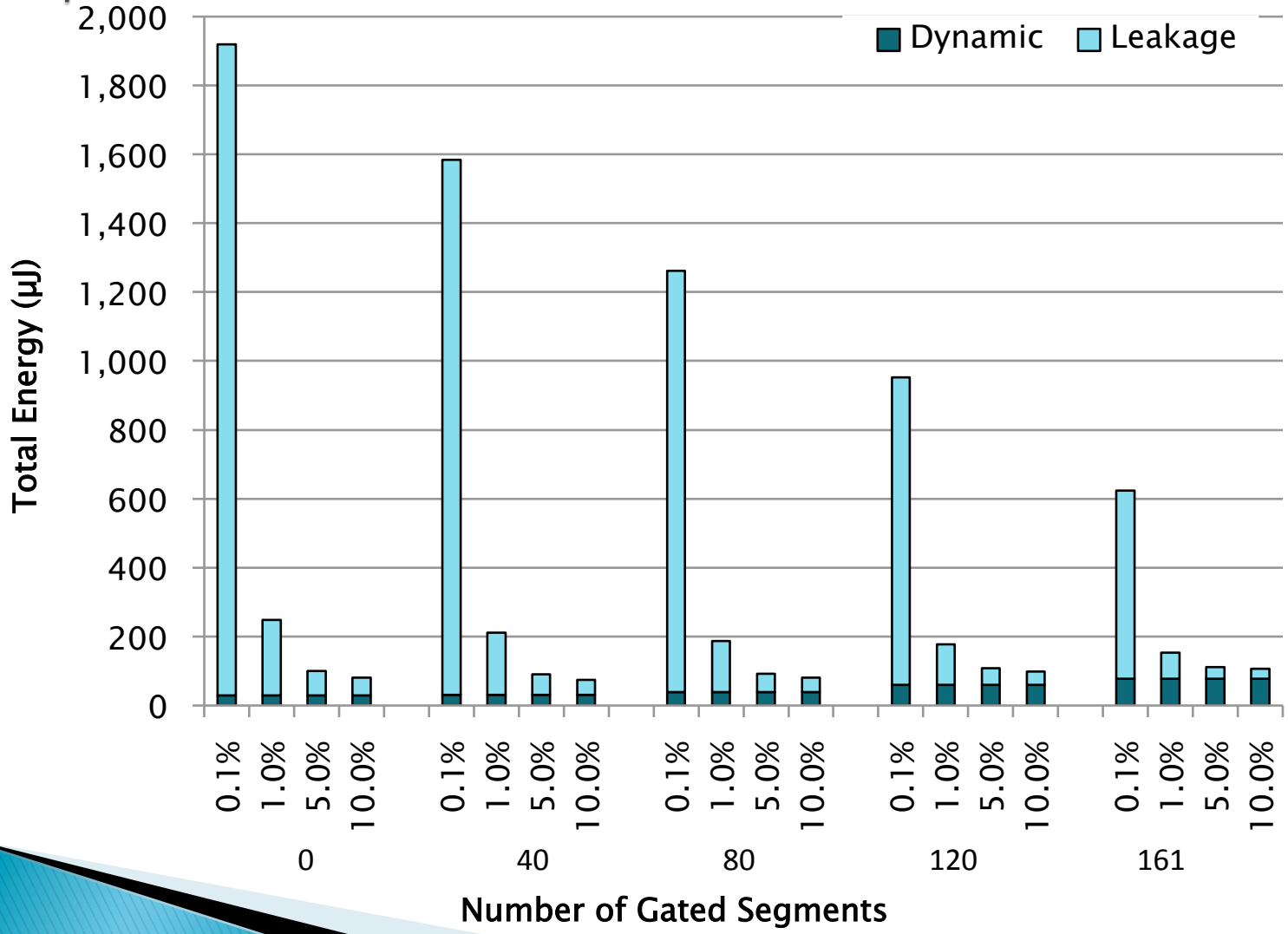

Department of Computer Science
The University of Texas at Austin

Dynamic Energy Incurred from Utilization-aware Segment Gating

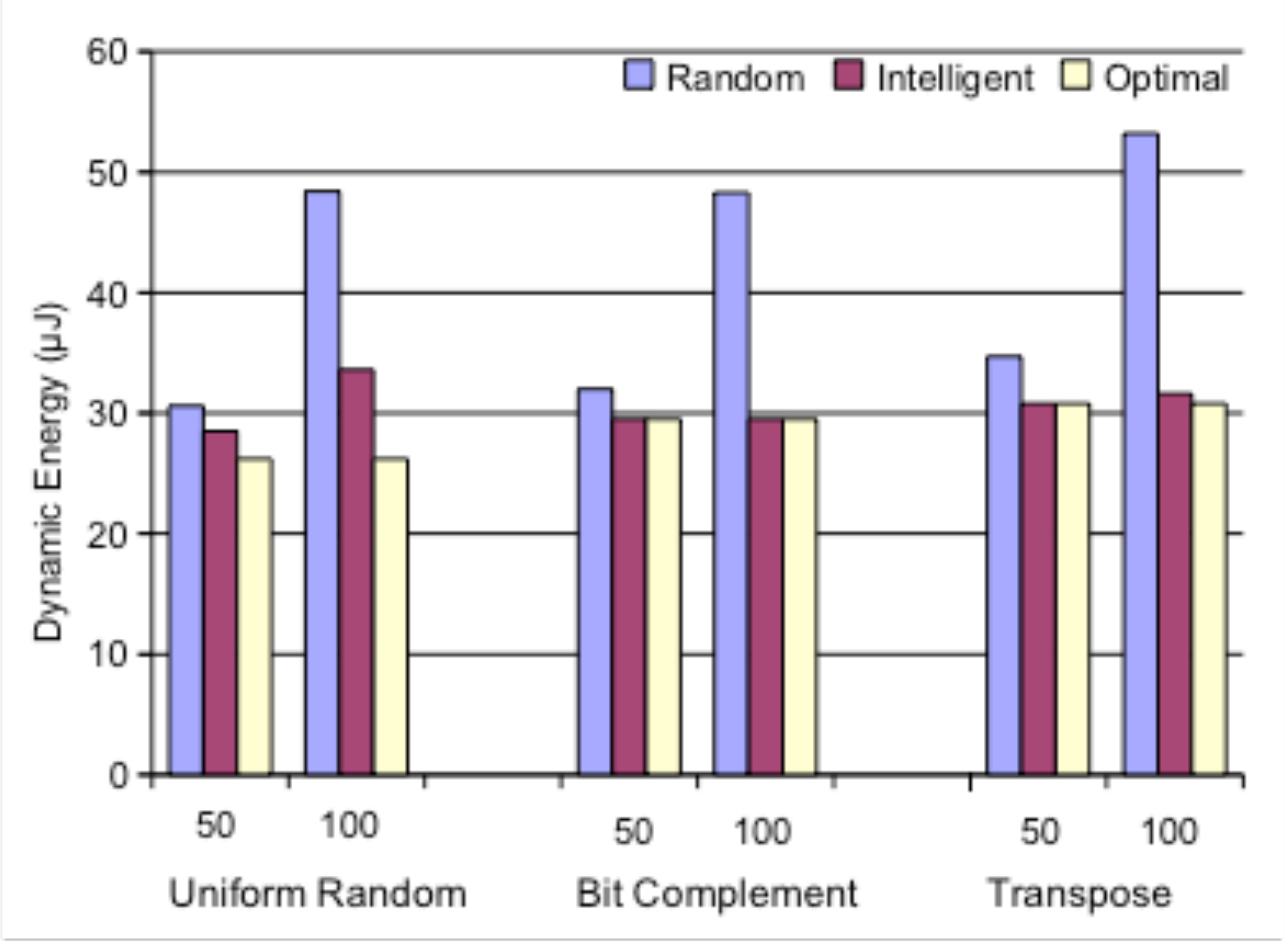

Department of Computer Science
The University of Texas at Austin

Dynamic Policy Space

- Two policies for idle period and *break-even* point
  - Aggressive: 2 cycles idle, 10 cycles to break even
  - Conservative: 10 cycles idle, 50 cycles to break even

Department of Computer Science
The University of Texas at Austin

Energy Consumption for PARSEC Benchmark Traces with Dynamic Policies

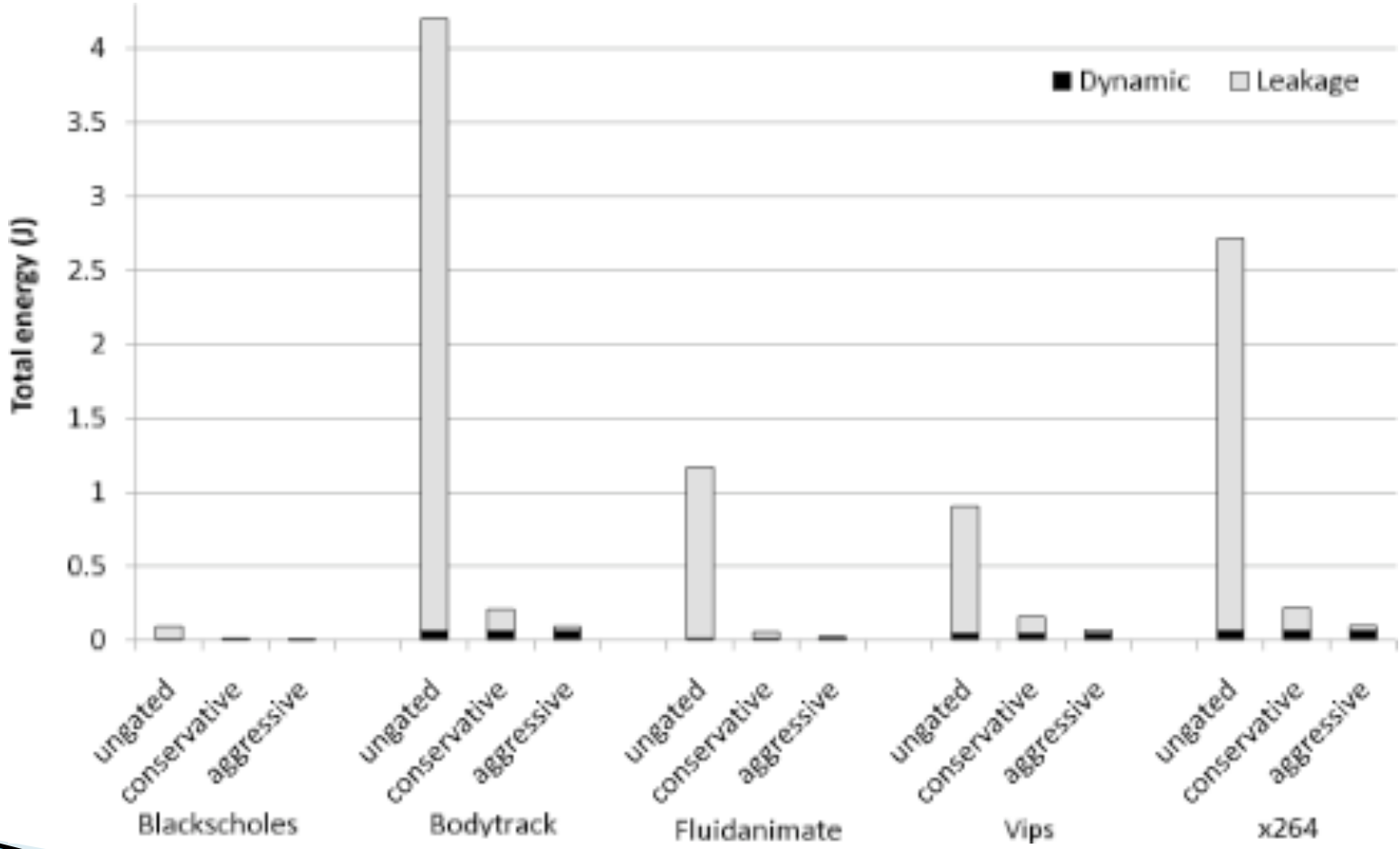

Department of Computer Science
The University of Texas at Austin

Future Work

- Detailed simulation and analysis
- Consider performance impact and contention
- Other network configurations
- Clearly establish regimes that should use Segment Gating
- Explore application to fault tolerant systems

Department of Computer Science
The University of Texas at Austin

Conclusions

- Real applications show sparse communication so potential for static energy savings is high
- Using link utilization, we can minimize dynamic energy incurred from gating segments statically
- Aggressive dynamic policy gives us static energy savings for up to 99% of cycles

Department of Computer Science
The University of Texas at Austin